belkin

Die Line File: IDL_B2B139_ROCKSTAR 10 PORT USB CHARGING STATION

Artwork File:

REV B 00

DIE LAYOUT

BOM B2B139	P#
Outer box	Refer Artwork
Main Insert	Refer Artwork
QIG	Refer Artwork
FCC/RC Statement	Refer Artwork

OUTER BOX
29ECT/175LB E FLUTE KRAFT

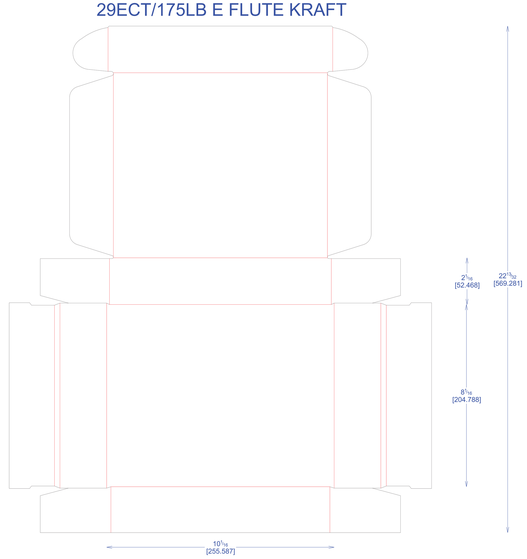

PRINTED OUTSIDE VIEW

Main Insert
29ECT/175LB E FLUTE KRAFT

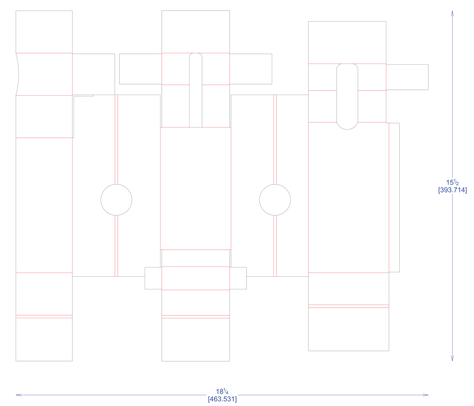

FCC/RC Statement
80 gsm Woodfree paper

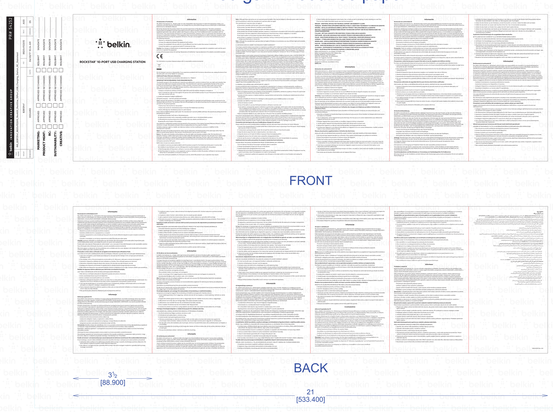

FRONT

BACK

QIG
300gsm 16 pt. C2S SBS

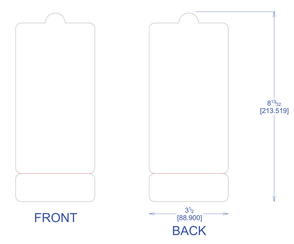

FRONT

BACK

28 LBS LITHO PAPER

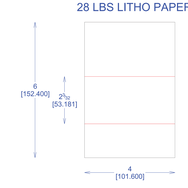

Business Unit:

Program Manager:

Packaging Engineer: Matthew Duffy

Retail Outside Dimension (Including Hang Tab)
L x W x D (in):
L x W x D (mm):

DIE/MATERIAL SPECS:

Material: 29ECT/175lb E Flute Kraft

Blank Size (in): 58.388 x 44.123

Blank Size (mm): 1483.043 x 1120.727

This dieline works for following skus (if any):

Unit: IN/MM

Side Shown: PRINT SIDE

Flute/Grain: horizontal

Tolerance:+/- 1/32" - 0.8mm

Drawing Scale 1:1

RELEASE DATE: 06/16/2017

DIELINE:

Intermediate

THIS DOCUMENT & THE INFORMATION IN IT ARE THE CONFIDENTIAL PROPERTY OF BELKIN INTERNATIONAL AND MUST NOT BE COPIED, REPRODUCED OR USED IN ANY MANNER WITHOUT THE WRITTEN CONSENT OF BELKIN CORPORATION. IT MUST BE RETURNED UPON REQUEST

PRINT SPECS:

Color Plates:

Finish:

Notes:

DO NOT PRINT
DIE LINES, PRINTERS NOTES